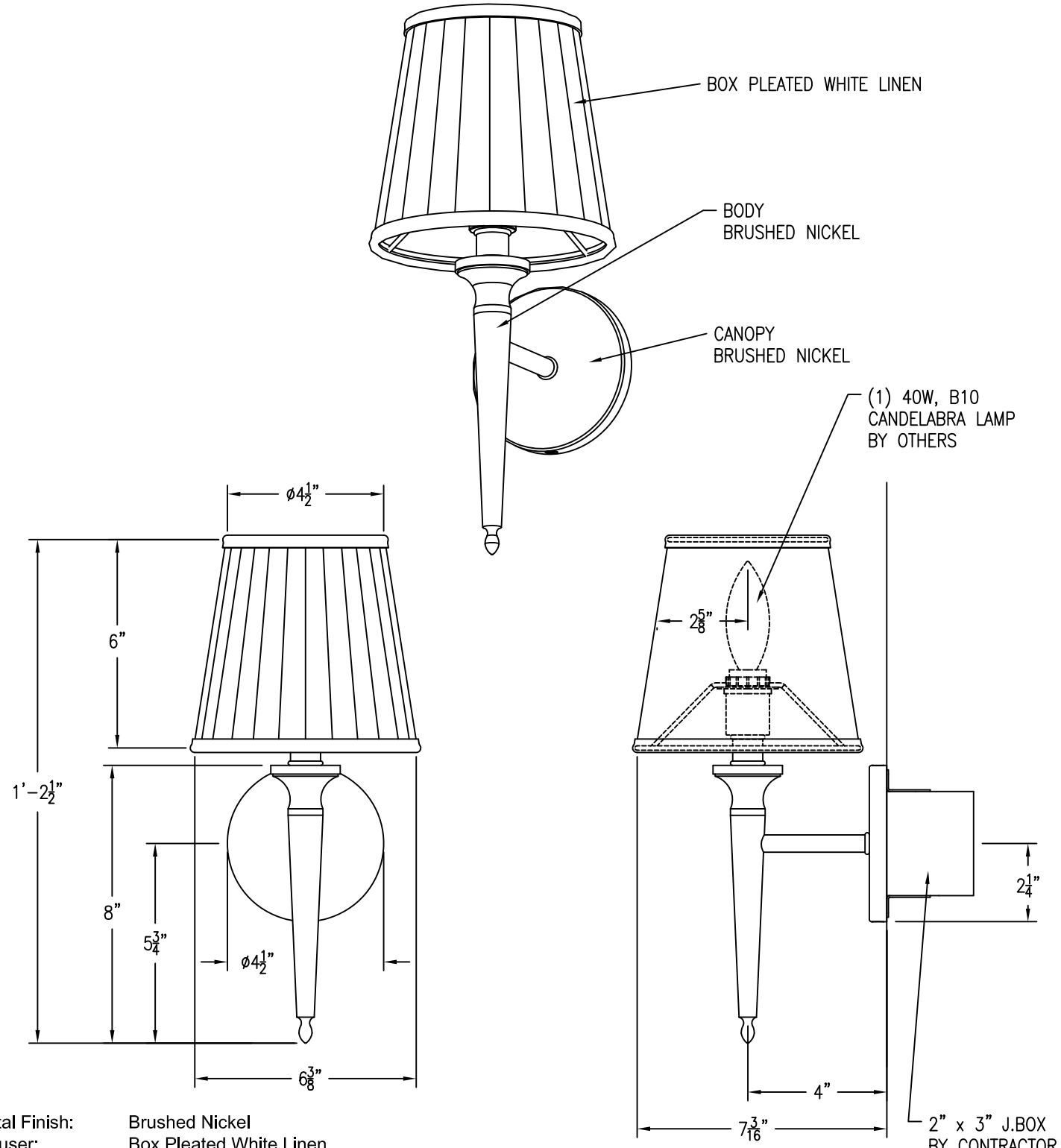

Metal Finish:	Brushed Nickel
Diffuser:	Box Pleated White Linen
Lamp:	(1) 40w Max
Voltage:	120V
UL APPROVED	

GFC LIGHTING CUSTOM MANOR FIRE PLACE SCONCE WS103